Texas Department of Transportation

DALLAS DISTRICT

WILLIAM L. HALE, P.E. DISTRICT ENGINEER

DESIGN SCHEMATIC

IH-30 MANAGED LANES (INTERSTATE)

MANAGED LANE PROJECT
CONTROLLING CSJ: 1068-04-126 (IH 30)
FROM TARRANT COUNTY LINE TO SYLVAN AVE IN DALLAS
CSJ: 1068-02-120 (IH 30)
FROM BALLPARK WAY TO DALLAS COUNTY LINE
THIS SCHEMATIC SHOWS A CONSTRUCTION PHASE OF SIGNATURE BRIDGE PROJECT
CSJ: 1068-04-116 (IH 30)
FROM EAST OF SYLVAN AVE TO IH 35E
SIGNATURE BRIDGE PROJECT SCHEMATIC APPROVED UNDER PEGASUS PROJECT
CONTROLLING CSJ: 0009-11-181 (IH 30)
FROM IH 45 TO IH 35E

Design Speed : 60 mph (Main line and HOV)
50 mph (HOV Ramps and Trinity River Bridge)
45 mph (Ramps)
Project Length : 13.14 miles

Average Daily Traffic 2007 (2025)

NW 19TH ST TO BELTLINE RD:	198,373 (214,801)
BELTLINE RD TO MacARTHUR BLVD:	195,488 (209,078)
MacARTHUR BLVD TO LOOP 12:	215,611 (215,658)
LOOP 12 TO WESTMORELAND:	194,348 (202,241)
WESTMORELAND TO HAMPTON RD:	170,903 (184,188)
HAMPTON RD. TO DOWNTOWN:	182,799 (195,659)

HIGHWAY VOLUMES INCLUDE MAIN AND HOV/ML LANES ONLY
SOURCE: NORTH CENTRAL TEXAS COUNCIL OF GOVERNMENTS

Dallas And Tarrant County
MAY 2006
Scale : Horizontal 1' = 200'
ROLL 6 OF 11

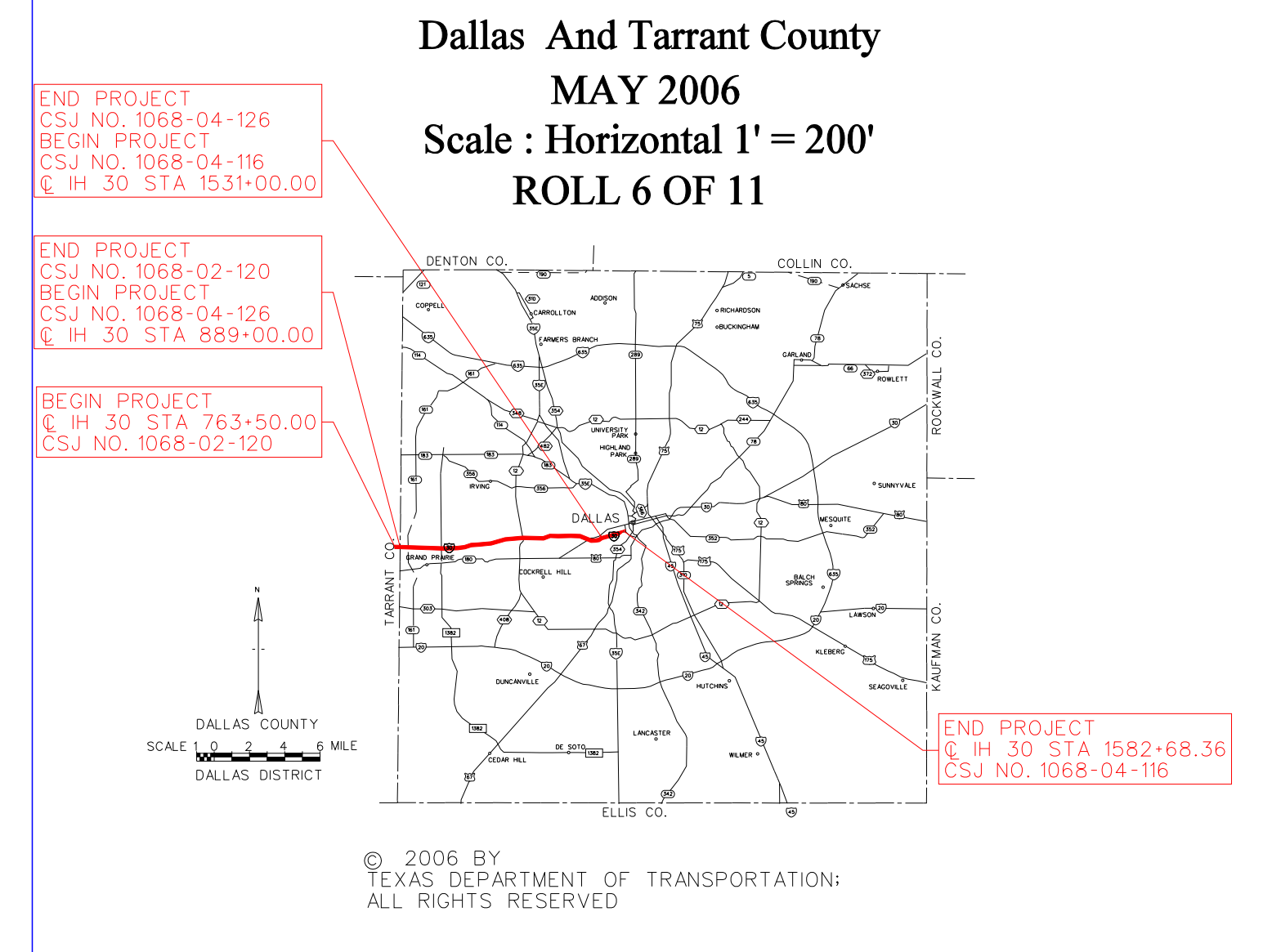
END PROJECT
CSJ NO. 1068-04-126
BEGIN PROJECT
CSJ NO. 1068-04-116
℄ IH 30 STA 1531+00.00
END PROJECT
CSJ NO. 1068-02-120
BEGIN PROJECT
CSJ NO. 1068-04-126
℄ IH 30 STA 889+00.00
BEGIN PROJECT
℄ IH 30 STA 763+50.00
CSJ NO. 1068-02-120
END PROJECT
℄ IH 30 STA 1582+68.36
CSJ NO. 1068-04-116
DENTON CO.
COLLIN CO.
ROCKWALL CO.
KAUFMAN CO.
ELLIS CO.
TARRANT CO.
DALLAS
DALLAS COUNTY
SCALE 0 1 2 3 6 MILE
DALLAS DISTRICT

© 2006 BY
TEXAS DEPARTMENT OF TRANSPORTATION;
ALL RIGHTS RESERVED

PREPARED BY BRIDGEFARMER & ASSOCIATES, INC.

DANNY L. KAHLER, PE	PRENTISS REVES, EIT
TX. PE 89746	TX. EIT 26613
DATE: 5/18/06	DATE: 5/18/06

BRIDGEFARMER & ASSOCIATES, INC.
CONSULTING ENGINEERS
12801 NORTH CENTRAL EXPRESSWAY,
SUITE 400
DALLAS, TEXAS 75243
TEL: (972) 231-8800 FAX: (972) 231-5900

DATE APPROVED

DATE SUBMITTED

DESIGN SCHEMATIC NOT INTENDED FOR CONSTRUCTION, BIDDING, OR PERMIT PURPOSES.

DATE REVISED

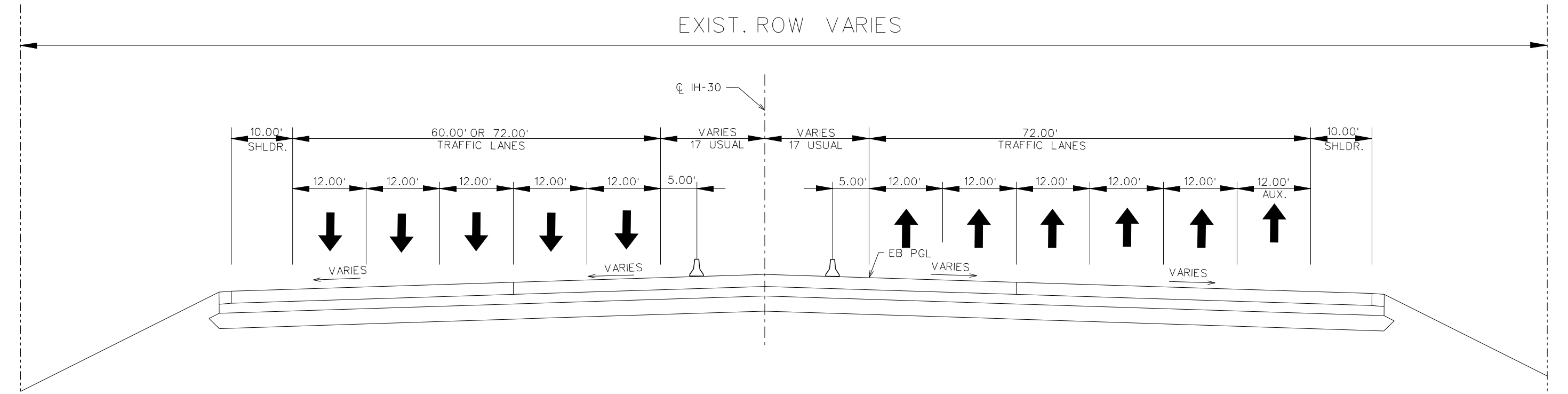
EXIST. ROW VARIES
℄ IH-30
10.00' SHLDR.
60.00' OR 72.00' TRAFFIC LANES
VARIES 17' USUAL
VARIES 17' USUAL
72.00' TRAFFIC LANES
10.00' SHLDR.
12.00'
12.00'
12.00'
12.00'
12.00'
5.00'
5.00'
12.00'
12.00'
12.00'
12.00'
12.00'
12.00' AUX.
VARIES
VARIES
EB PGL
VARIES
VARIES

EXISTING TYPICAL SECTION

STA. 1236+55.95 TO STA. 1295+00.00
(EXCLUDING LOOP 12 BRIDGE)

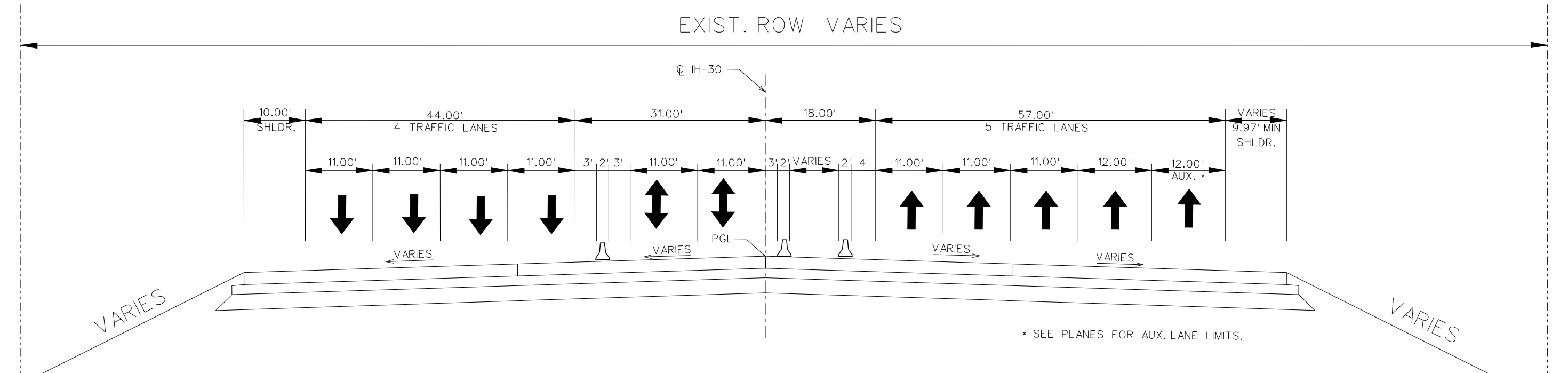
EXIST. ROW VARIES
℄ IH-30
10.00' SHLDR.
44.00' 4 TRAFFIC LANES
31.00'
18.00'
57.00' 5 TRAFFIC LANES
VARIES 9.97' MIN SHLDR.
11.00'
11.00'
11.00'
11.00'
3' 2' 3'
11.00'
11.00'
3' 2' VARIES 2' 4'
11.00'
11.00'
11.00'
12.00'
12.00' AUX. *
PGL
VARIES
VARIES
VARIES
VARIES
VARIES
VARIES
* SEE PLANES FOR AUX. LANE LIMITS.

PROPOSED TYPICAL SECTION

STA. 1230+00.00 TO 1285+00.00
(EXCLUDING LOOP 12 BRIDGE)

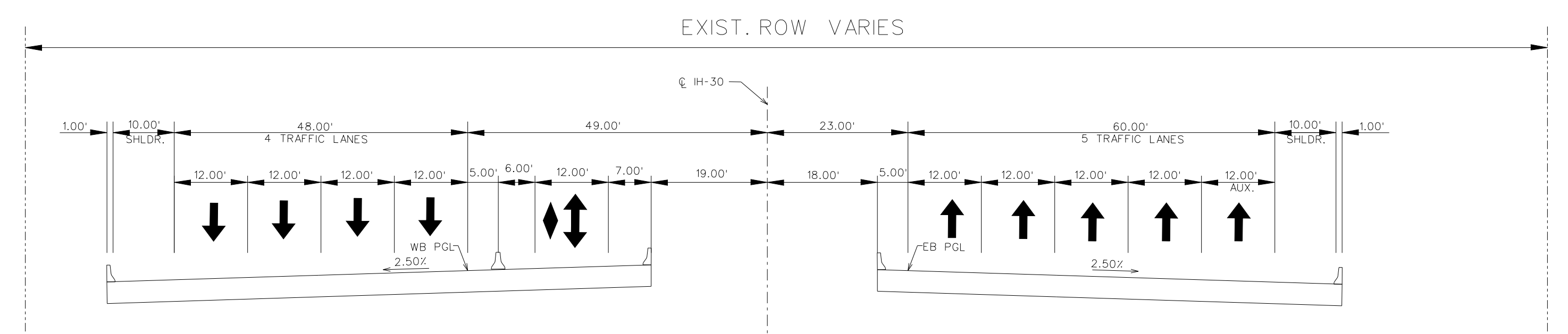
EXIST. ROW VARIES
℄ IH-30
1.00'
10.00' SHLDR.
48.00' 4 TRAFFIC LANES
49.00'
23.00'
60.00' 5 TRAFFIC LANES
10.00' SHLDR.
1.00'
12.00'
12.00'
12.00'
12.00'
5.00'
6.00'
12.00'
7.00'
19.00'
18.00'
5.00'
12.00'
12.00'
12.00'
12.00'
12.00' AUX.
WB PGL
2.50%
EB PGL
2.50%

EXISTING TYPICAL SECTION

AT LOOP 12 BRIDGE

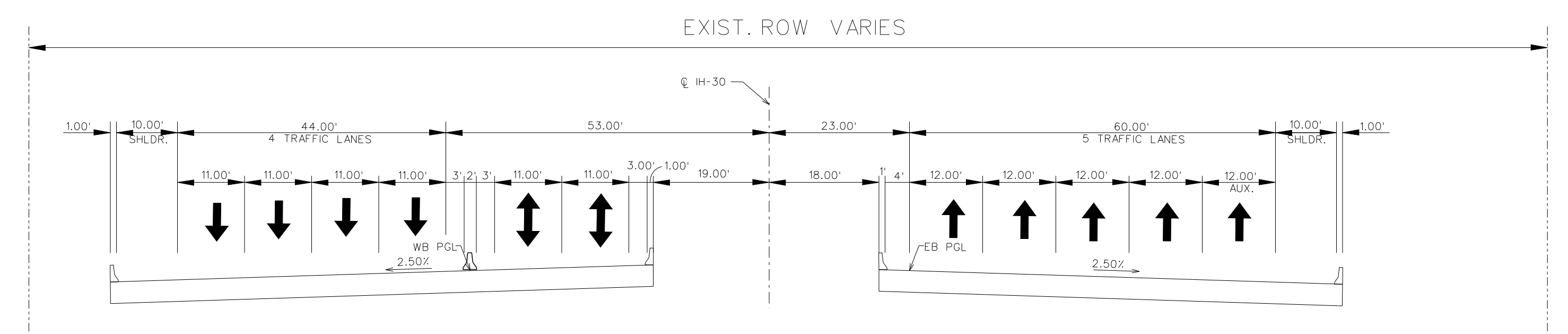
EXIST. ROW VARIES
℄ IH-30
1.00'
10.00' SHLDR.
44.00' 4 TRAFFIC LANES
53.00'
23.00'
60.00' 5 TRAFFIC LANES
10.00' SHLDR.
1.00'
11.00'
11.00'
11.00'
11.00'
3' 2' 3'
11.00'
11.00'
3.00'
1.00'
19.00'
18.00'
4'
12.00'
12.00'
12.00'
12.00'
12.00' AUX.
WB PGL
2.50%
EB PGL
2.50%

PROPOSED TYPICAL SECTION

AT LOOP 12 BRIDGE
STA. 1245+00.00 TO 1283+50.00

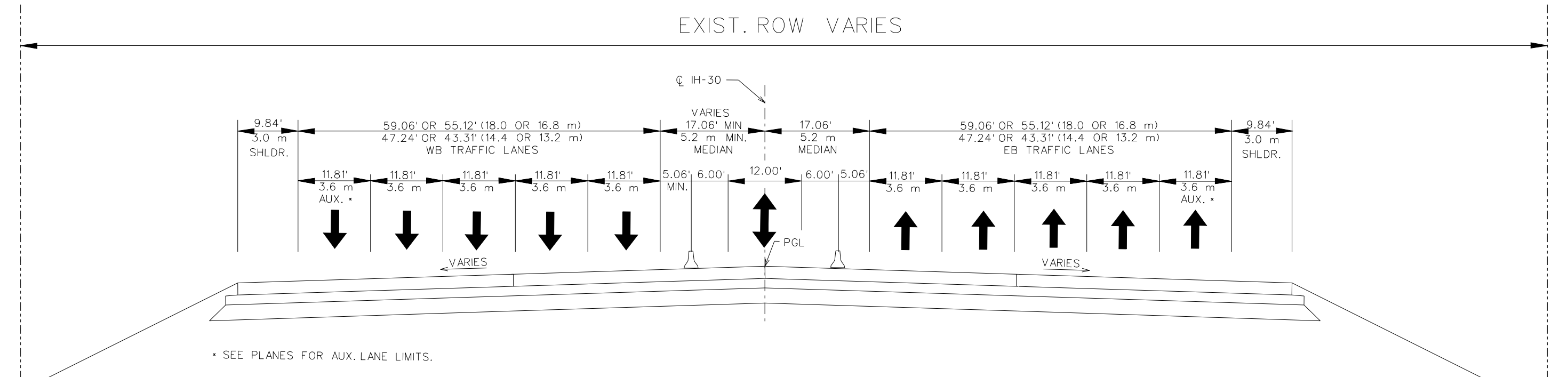
EXIST. ROW VARIES
℄ IH-30
9.84' 3.0 m SHLDR.
59.06' OR 55.12' (18.0 OR 16.8 m)
47.24' OR 43.31' (14.4 OR 13.2 m)
WB TRAFFIC LANES
VARIES 17.06' MIN 5.2 m MIN. MEDIAN
17.06' 5.2 m MEDIAN
59.06' OR 55.12' (18.0 OR 16.8 m)
47.24' OR 43.31' (14.4 OR 13.2 m)
EB TRAFFIC LANES
9.84' 3.0 m SHLDR.
11.81' 3.6 m AUX. *
11.81' 3.6 m
11.81' 3.6 m
11.81' 3.6 m
11.81' 3.6 m
5.06' MIN.
6.00'
12.00'
6.00'
5.06'
11.81' 3.6 m
11.81' 3.6 m
11.81' 3.6 m
11.81' 3.6 m
11.81' 3.6 m AUX. *
PGL
VARIES
VARIES
* SEE PLANES FOR AUX. LANE LIMITS.

EXISTING TYPICAL SECTION

STA. 1295+00.00 TO STA. 1525+59.00

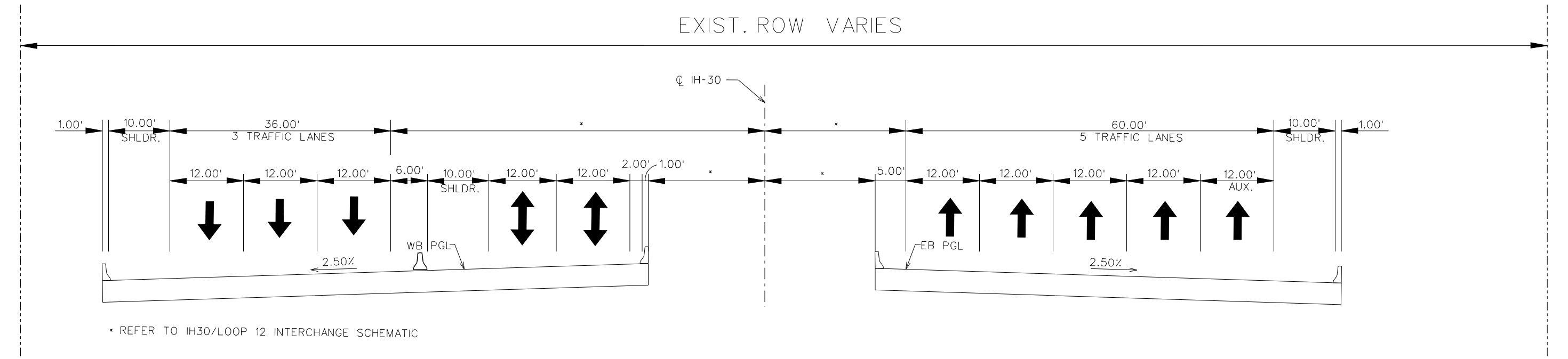
EXIST. ROW VARIES
℄ IH-30
1.00'
10.00' SHLDR.
36.00' 3 TRAFFIC LANES
*
*
60.00' 5 TRAFFIC LANES
10.00' SHLDR.
1.00'
12.00'
12.00'
12.00'
6.00'
10.00' SHLDR.
12.00'
12.00'
2.00'
1.00'
*
*
5.00'
12.00'
12.00'
12.00'
12.00'
12.00' AUX.
2.50%
WB PGL
EB PGL
2.50%
* REFER TO IH30/LOOP 12 INTERCHANGE SCHEMATIC

NOTE: THIS TYPICAL SECTION IS TO SHOW THE FUTURE NUMBER OF LANES ONLY.

FUTURE TYPICAL SECTION

AT LOOP 12 BRIDGE

REFER TO SHEET 11 OF 11 FOR CURVE DATA

100 50 0 100 200
SCALE: 1" = 200'
MATCH LINE STA 1216+00 CSJ: 1068-04-126
MANAGED LANE
ENTRANCE
EXISTING ROW
IH 30
1230+00
1235+00
1240+00
1245+00
1255+00
1260+00
1265+00
1270+00
1280+00
1285+00
1290+00
1295+00
IH 30 C/L
EXISTING ROW
MOUNTAIN CREEK
PROP. OVERHEAD SIGN STRUCTURE (BY OTHERS CSJ: 1068-04-133) TO BE RELOCATED
SCHCL3-7
EXISTING 1-60" CULVERT
EXISTING 1-72" CULVERT
LOOP 12
UPRR
MANAGED LANE
ENTRANCE
1 MILE
LEFT LANE
WILL BE CHANGED AS PART OF CURRENT CONSTRUCTION PROJECT
SCHCL3-8
SCHCL3-9
EXISTING 3-72" CULVERT
EXISTING 2-30" CULVERT
MANAGED LANE
Westmoreland Rd
Postal Way
Hampton Rd
EXIT ONLY
Downtown
CHALK HILL RD
MATCH LINE STA 1301+00 CSJ: 1068-04-126

LEGEND

🟨	EXISTING OR UNDER CONSTRUCTION MAIN LANES AND RAMPS
🟪	EXISTING OR UNDER CONSTRUCTION IH 30 BRIDGES
🟧	HOV / MANAGED LANES
🟦	HOV WISHBONE RAMPS
🟪	NEW PAVEMENT/ PAVEMENT WIDENING
🟦	NEW BRIDGE / BRIDGE WIDENING
🟨	PROP. RAMP / RAMP RECONSTRUCTION
🟩	FUTURE PROP. FRONTAGE ROAD
— · —	EXISTING R.O.W.
— —	EXISTING OR UNDER CONSTRUCTION RETAINING WALL
— —	PROPOSED RETAINING WALL
——	PROPOSED CTB
• • •	PROPOSED PYLONS OR CONES
←	DIRECTIONAL ARROW

LOOP 12 SECTION WILL BE CONSTRUCTED DURING CURRENT PROJECT

PROFILE IS NOT INTENDED FOR DESIGN PURPOSES. PROFILE WAS OBTAINED FROM PREVIOUS PLANS AND IS INTENDED TO SHOW THE CHARACTERISTICS OF WHAT HAS ALREADY BEEN BUILT

Texas Department of Transportation
DALLAS DISTRICT
WILLIAM L. HALE, P.E. DISTRICT ENGINEER
DESIGN SCHEMATIC
IH-30 MANAGED LANES (INTERSTATE)
MANAGED LANE PROJECT
CONTROLLING CSJ: 1068-04-126 (IH 30)
FROM TARRANT COUNTY LINE TO SYLVAN AVE IN DALLAS
CSJ: 1068-02-120 (IH 30)
FROM BALLPARK WAY TO DALLAS COUNTY LINE
THIS SCHEMATIC SHOWS A CONSTRUCTION PHASE OF SIGNATURE BRIDGE PROJECT
CSJ: 1068-04-116 (IH 30)
FROM EAST OF SYLVAN AVE TO IH 35E
SIGNATURE BRIDGE PROJECT SCHEMATIC APPROVED UNDER PEGASUS PROJECT
CONTROLLING CSJ: 0009-11-181 (IH 30)
FROM IH 45 TO IH 35E
Design Speed : 60 mph (Main line and HOV)
50 mph (HOV Ramps and Trinity River Bridge)
45 mph (Ramps)
Project Length : 13.14 miles
Average Daily Traffic 2007 (2025)
NW 19TH ST TO BELTLINE RD: 198,373 (214,801)
BELTLINE RD TO MacARTHUR BLVD: 195,488 (209,078)
MacARTHUR BLVD TO LOOP 12: 215,611 (215,658)
LOOP 12 TO WESTMORELAND: 194,348 (202,241)
WESTMORELAND TO HAMPTON RD: 170,903 (184,188)
HAMPTON RD. TO DOWNTOWN: 182,799 (195,659)
HIGHWAY VOLUMES INCLUDE MAIN AND HOV/ML LANES ONLY
SOURCE: NORTH CENTRAL TEXAS COUNCIL OF GOVERNMENTS
Dallas And Tarrant County
MAY 2006
Scale : Horizontal 1' = 200'
ROLL 6 OF 11

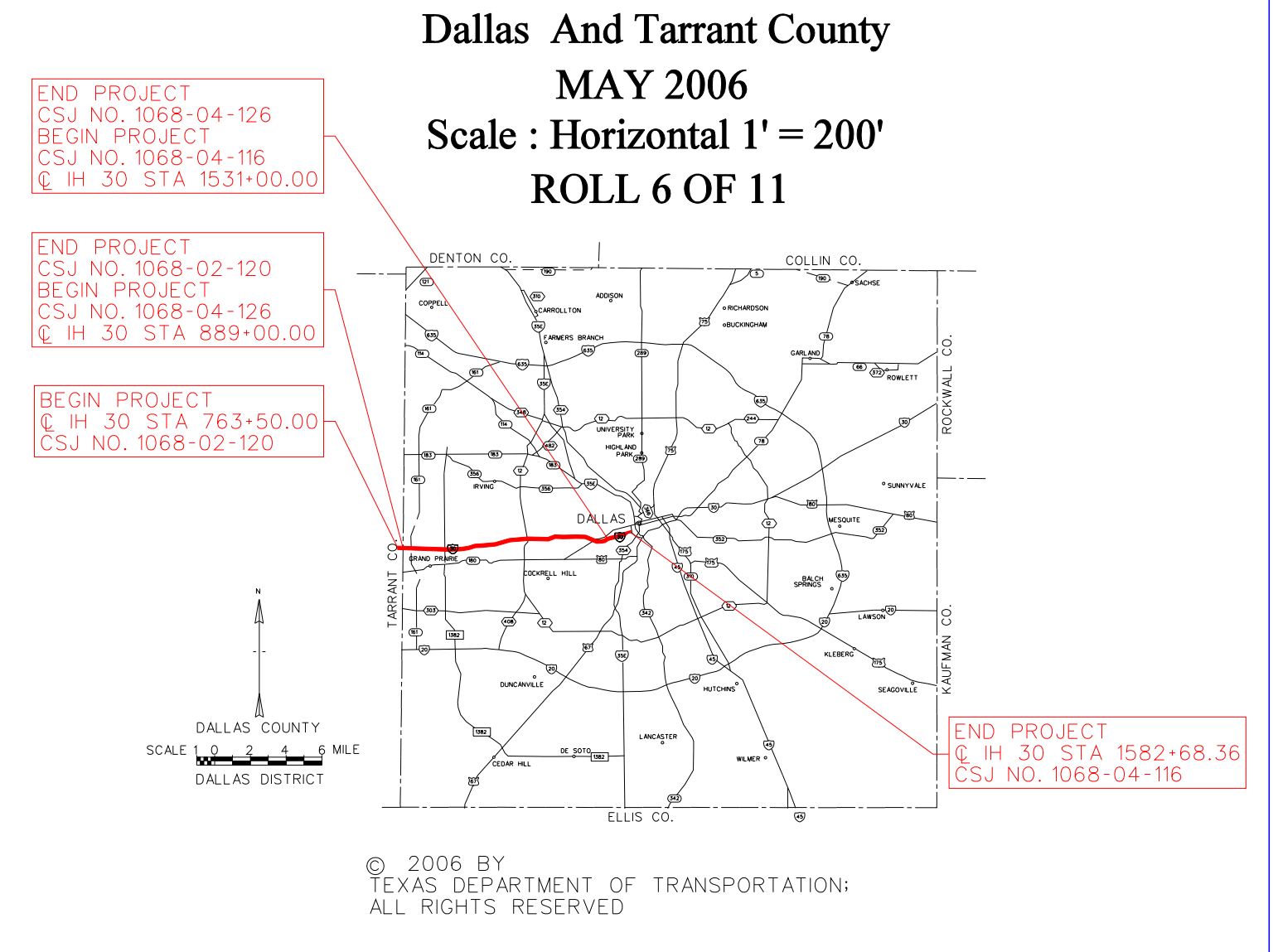
END PROJECT
CSJ NO. 1068-04-126
BEGIN PROJECT
CSJ NO. 1068-04-116
℄ IH 30 STA 1531+00.00
END PROJECT
CSJ NO. 1068-02-120
BEGIN PROJECT
CSJ NO. 1068-04-126
℄ IH 30 STA 889+00.00
BEGIN PROJECT
℄ IH 30 STA 763+50.00
CSJ NO. 1068-02-120
END PROJECT
℄ IH 30 STA 1582+68.36
CSJ NO. 1068-04-116
DALLAS COUNTY
DALLAS DISTRICT

© 2006 BY
TEXAS DEPARTMENT OF TRANSPORTATION;
ALL RIGHTS RESERVED
PREPARED BY BRIDGEFARMER & ASSOCIATES, INC.
DANNY L. KAHLER, PE TX. PE 89746 DATE: 5/18/06
PRENTISS REVES, EIT TX. EIT 26613 DATE: 5/18/06
BRIDGEFARMER & ASSOCIATES, INC.
CONSULTING ENGINEERS
12801 NORTH CENTRAL EXPRESSWAY,
SUITE 400
DALLAS, TEXAS 75243
TEL: (972) 231-8800 FAX: (972) 231-5900
DATE APPROVED
DATE SUBMITTED
DESIGN SCHEMATIC NOT INTENDED FOR CONSTRUCTION, BIDDING, OR PERMIT PURPOSES.
DATE REVISED